V−Balanced V−I converter ver. 3
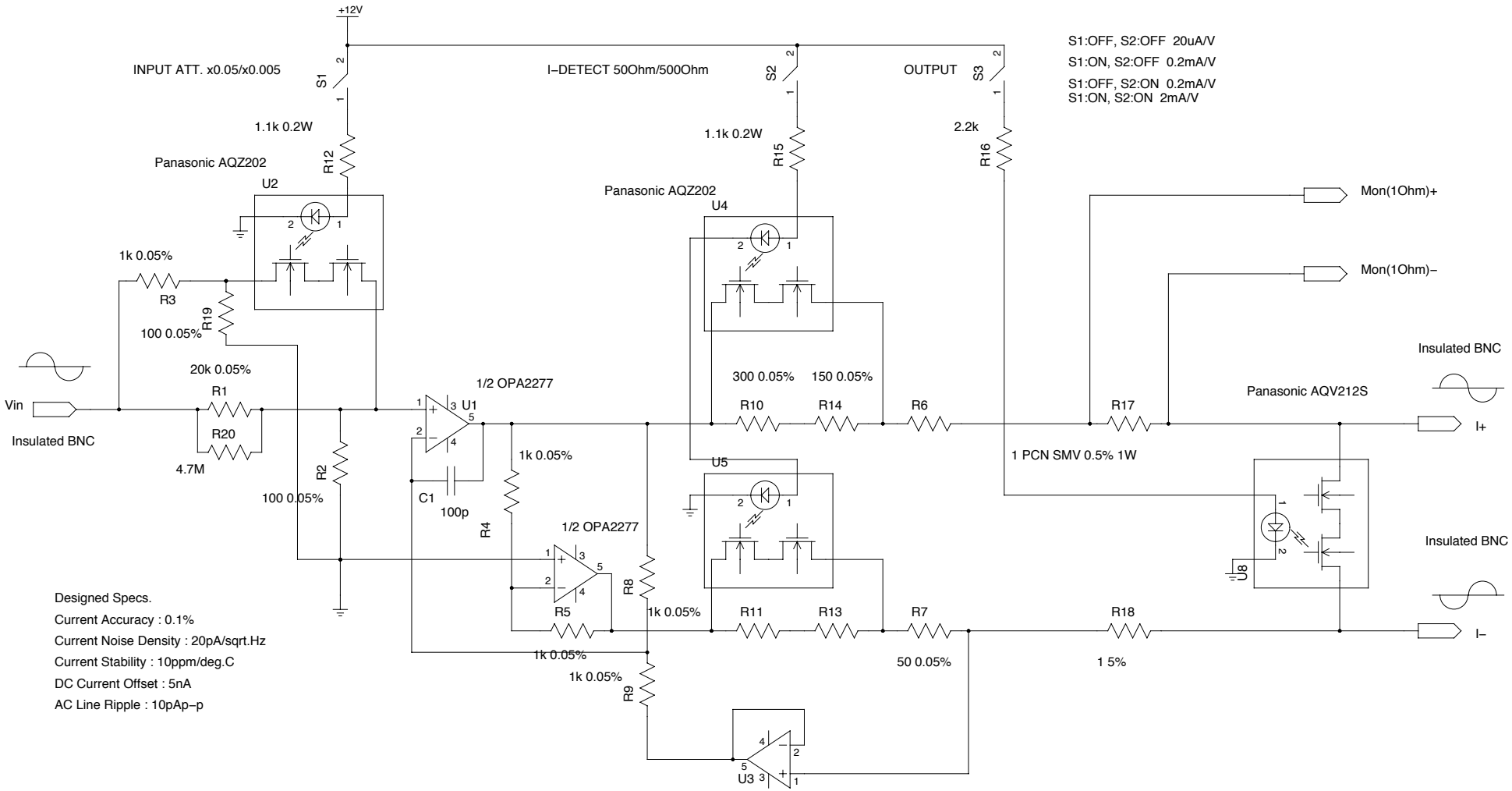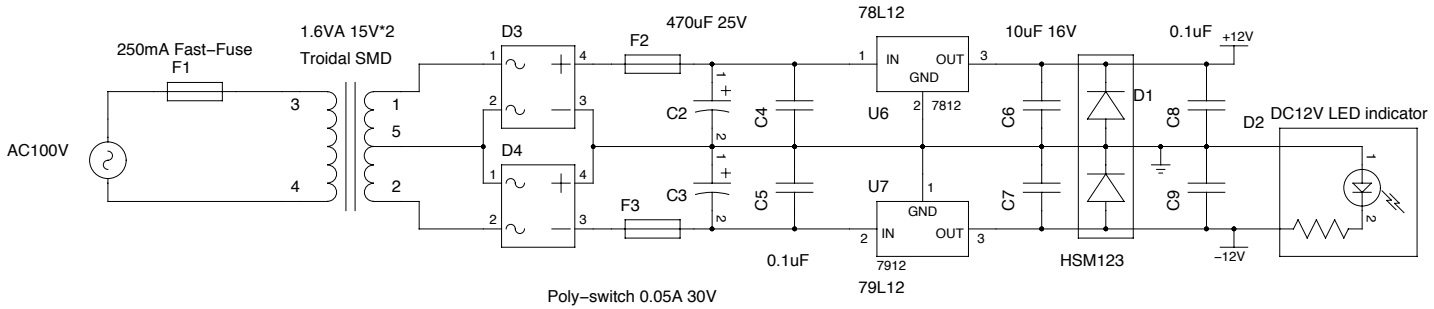
Kentaro Kitagawa Dec, 2011