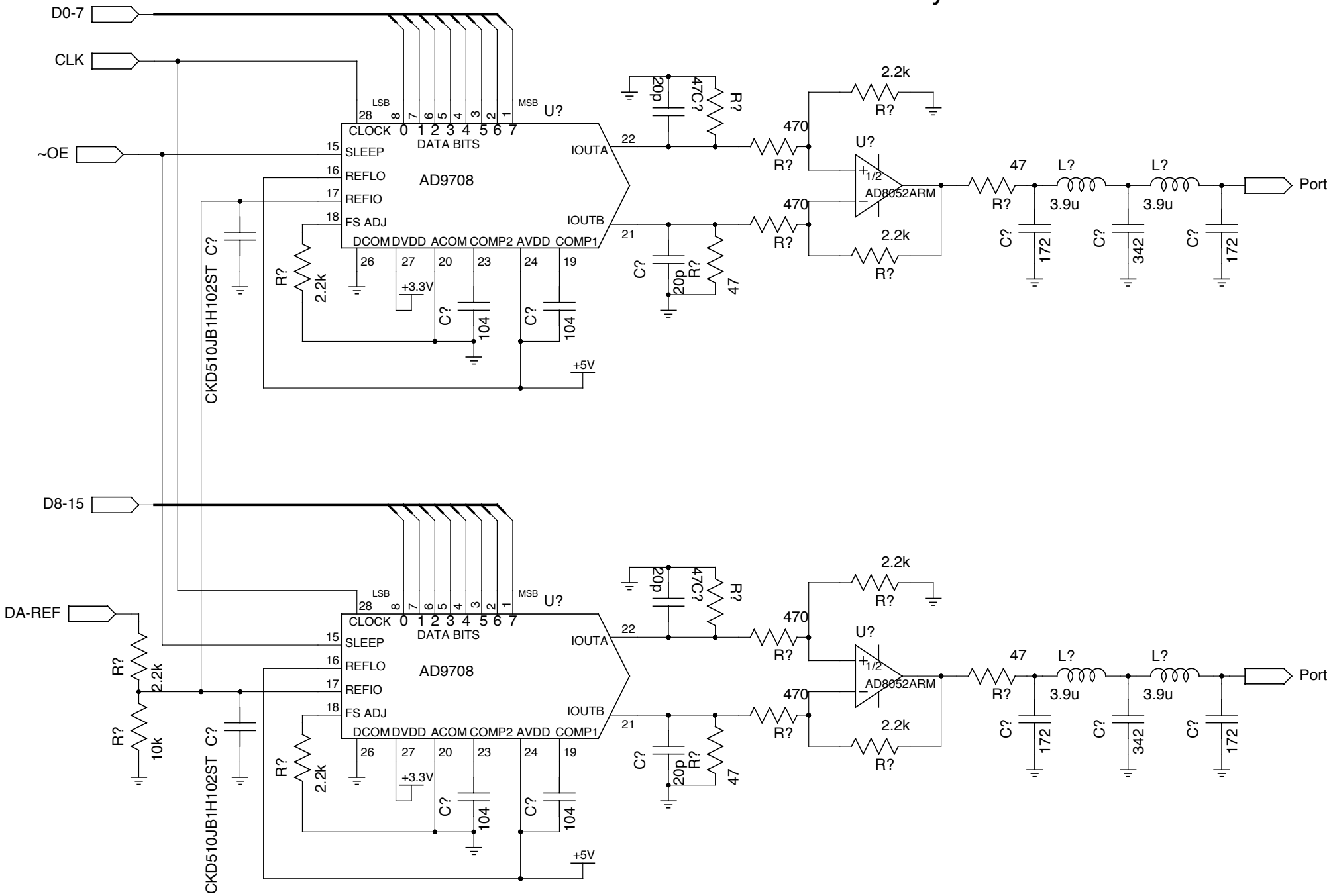Arbitrary Func. PCB