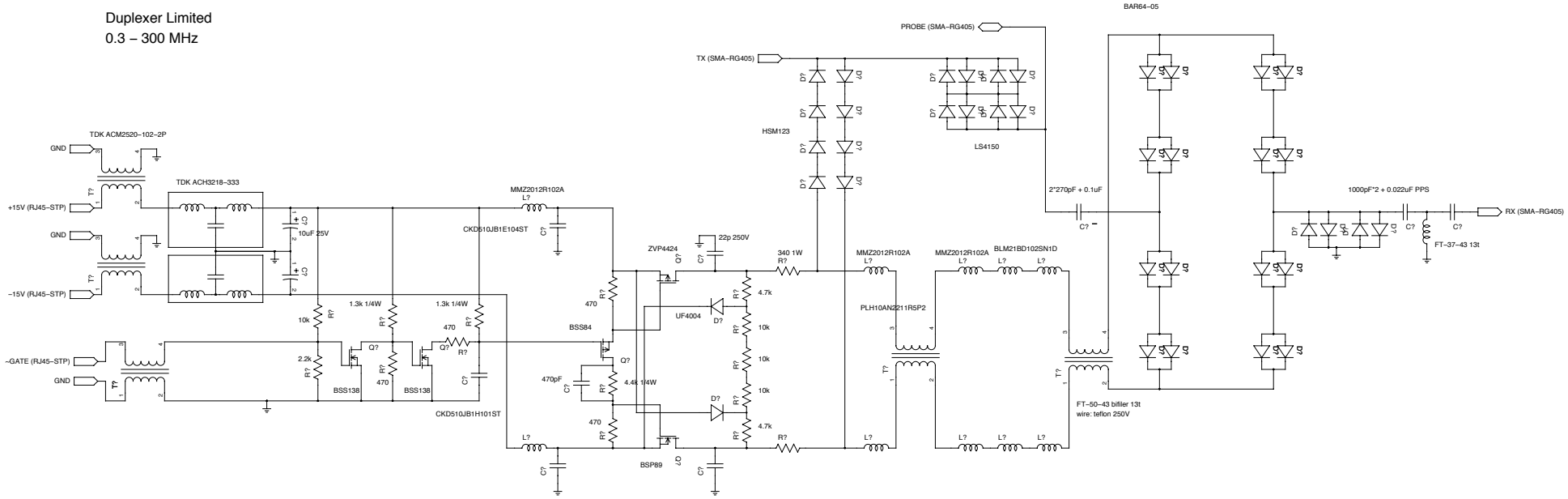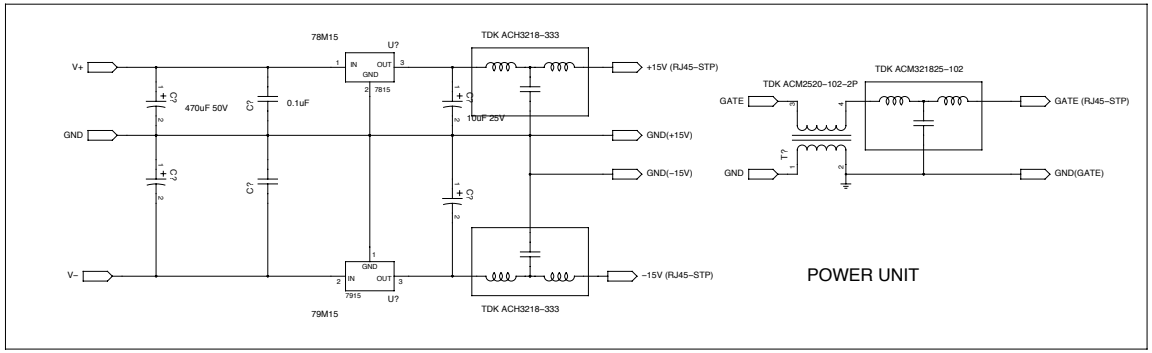Duplexer Limited
0.3 – 300 MHz