LNA ver. 4R4 for 77 K operation.
G=37dB, 1.5–270MHz
NF=0.3 dB (typ.)
Kentaro Kitagawa

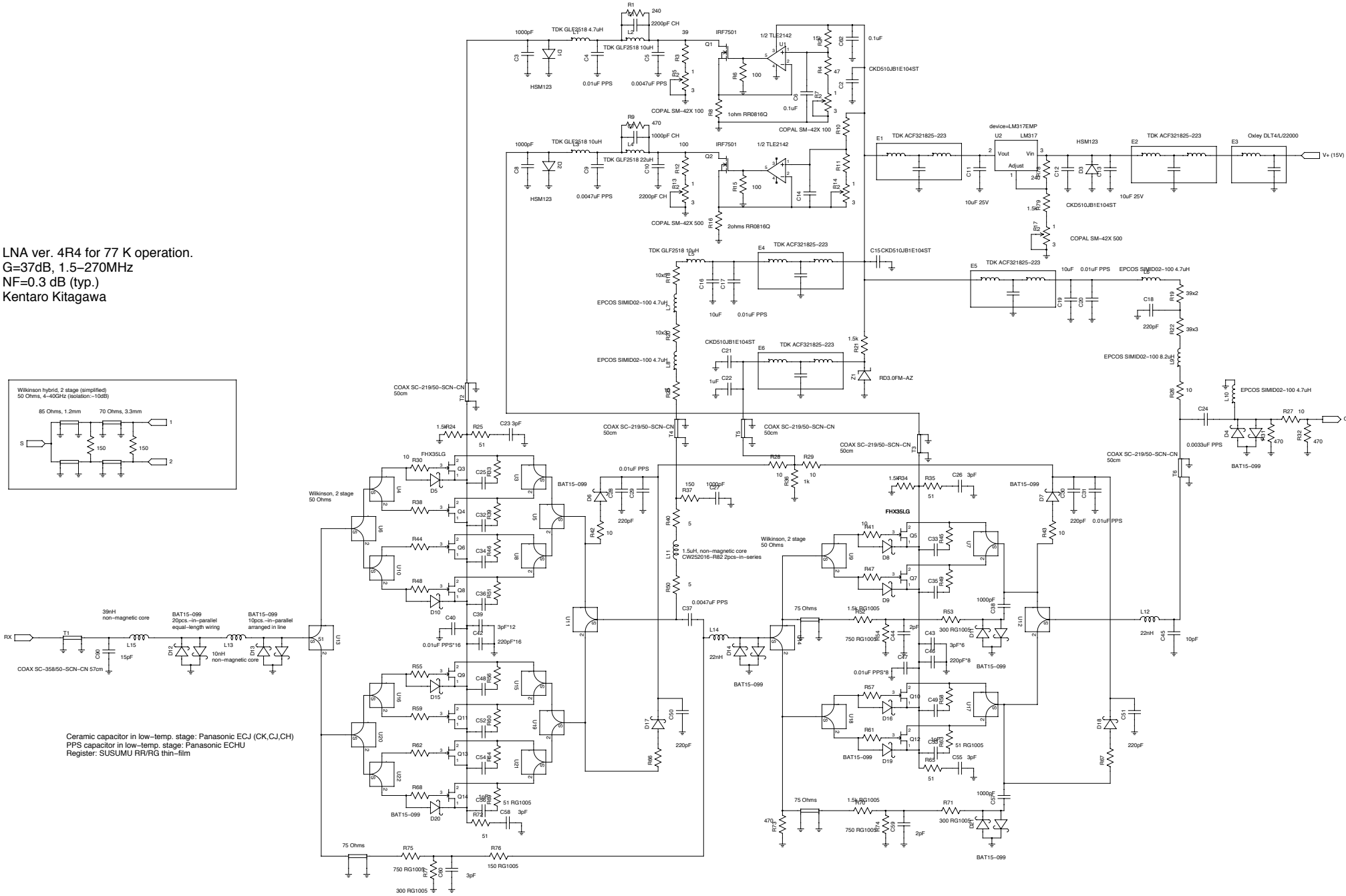

Ceramic capacitor in low–temp. stage: Panasonic ECJ (CK,CJ,CH)
PPS capacitor in low–temp. stage: Panasonic ECHU
Register: SUSUMU RR/RG thin–film